Case Material : Steel Painted Black
Lens material : Polycarbonate
Socket : Brass
Tube : Phosphor Bronze
Movement : Brass
Accuracy : +/-3%-25-3%
Ambient Temperature Limits: -40F to 158F (-40C to 70C)
Process Temperature Limits: -40F to 158F (-40C to 70C)
Enclosure Rating : IP52

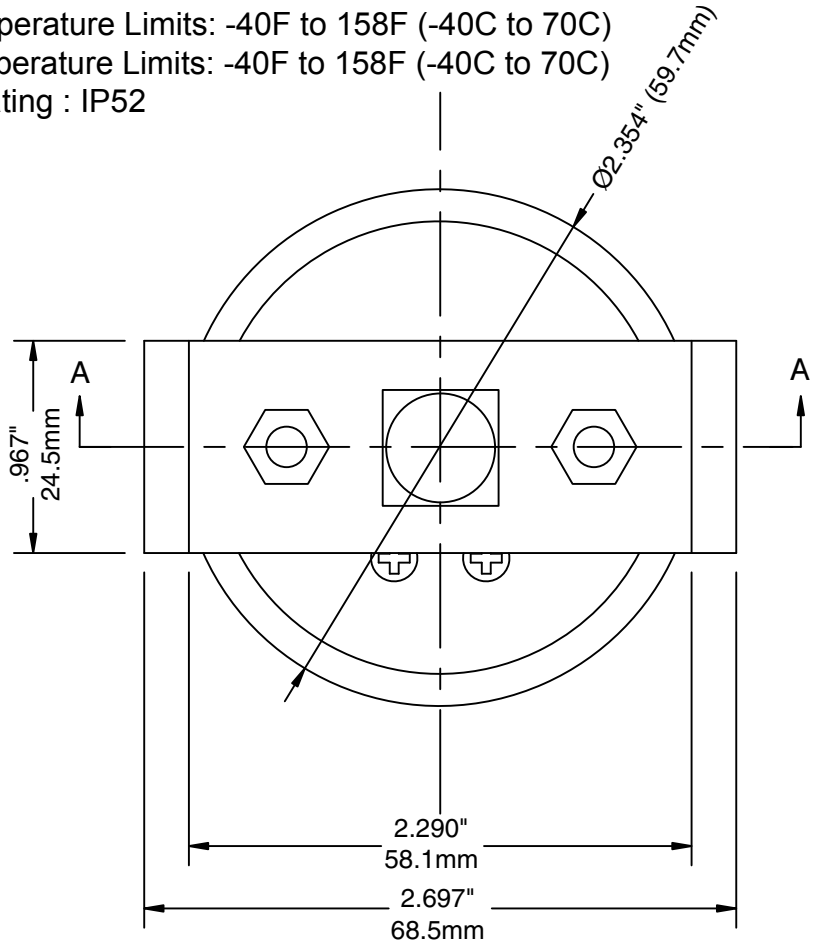

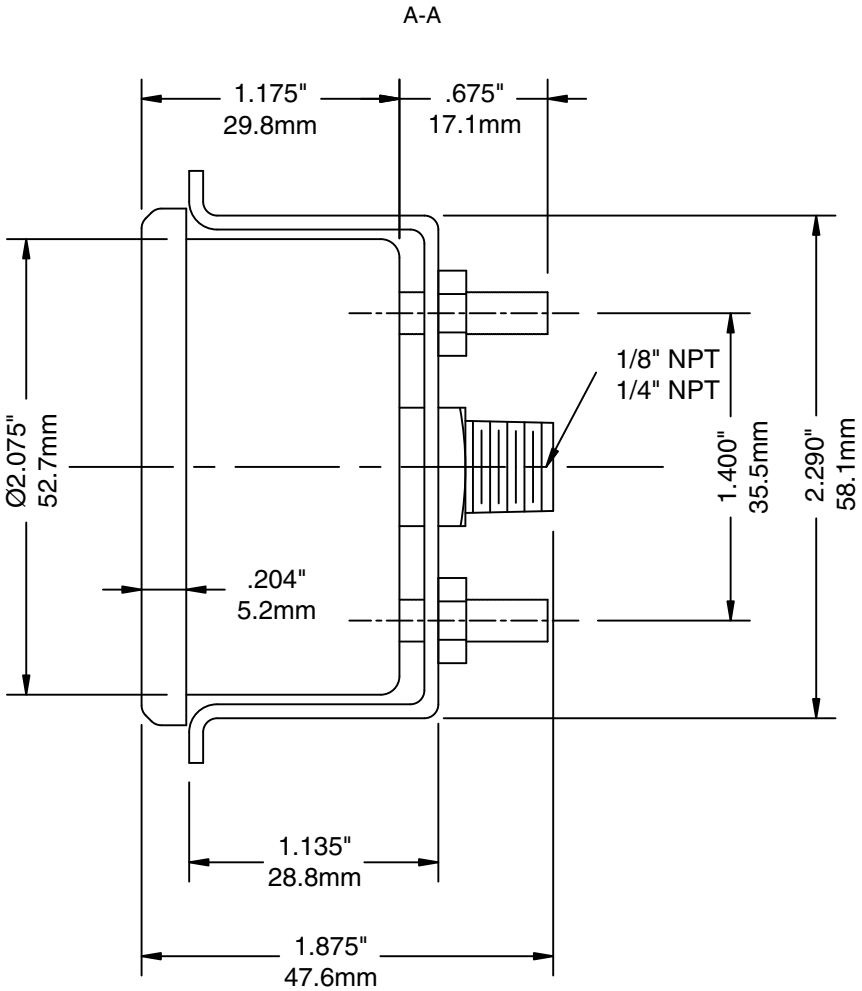

WINTERS Since 1953	DRAWN BY: PHOEBE MA	ALL DIMENSIONS IN INCHES	TITLE:
	ENG. APPROVAL: David Reay — Digitally signed by David Reay DN: cn=David Reay, c=CA, l=Toronto, st=Ontario, o=Winters Instruments, email=dreay@winters.com Reason: I am approving this document Date: 2009.02.17 15:08:39 -05'00'	TOLERANCES (unless otherwise stated)	2" ECONOMY PANEL MOUNTED GAUGE
		Fractional: 1/64"	
		Decimal: 0.06"	
		REVISION DATE: Jan. 08, 2009	DRAWING NO: PEU-20-Y-B-V